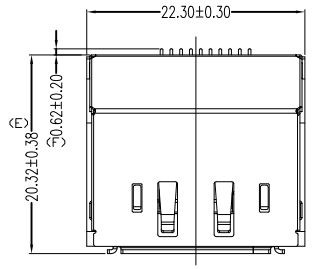


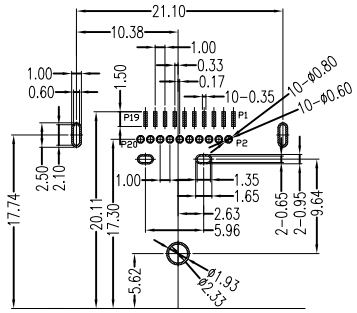


RECOMMENDED P.C.B. LAYOUT
TOLERANCE±0.05
TOP VIEW
INSPECTION DIMENSION:(A)~(K)

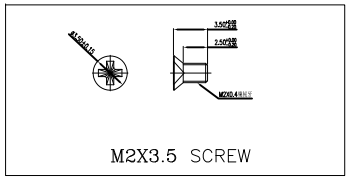


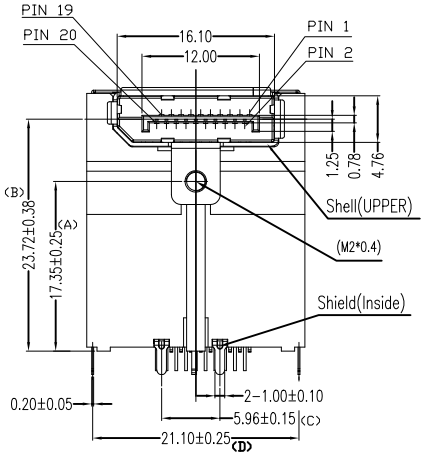


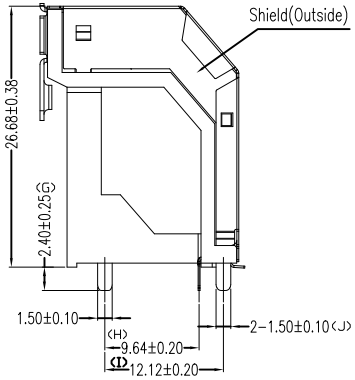


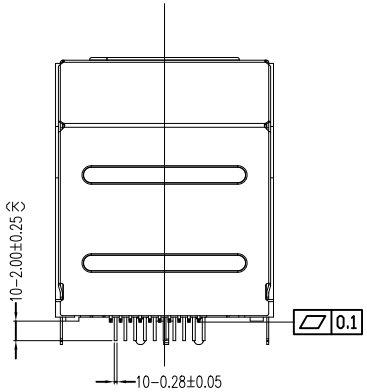


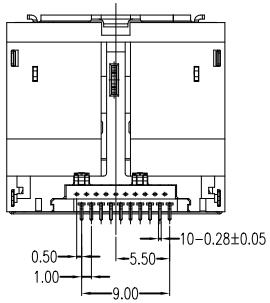


## NOTES

1. MATERIAL:
   Housing:LCP, UL 94V-0, Color:Black.
   Bracket:LCP, UL 94V-0, Color:Black.
   Terminal:Copper Alloy.
   Shell(UPPER):Stainless Steel.
   Shield(outside):Stainless Steel.
   Shield(inside):Stainless Steel.
   Boardlock:SK5.
   Screw:Steel.
2. FINISH:
   Terminal:Selected Gold Plated in Contact Area,
   100u" MIN. Tin Plated in Solder Area,
   30u" MIN. Nickel Underplated Overall.
   Shield(outside):Nickel Plated.
   Shield(inside):Nickel Plated.
   Screw:Nickel Plated.
   Boardlock:Tin Plated.
3. This Product is RoHS Compliance Product.

## SPECIFICATIONS

1. Displayport
1.1 Voltage: 40 VAC(RMS) Max.
1.2 Current Rating: 0.5 Ampere per Pontact
1.3 Contact Resistance: 30 Milliohms Max.
1.4 Insulation Resistance: 100 Megohms Min.
1.5 Dielectric Withstanding Voltage: 500V DC(RMS)
1.6 Total Mating Force: 4.5 Kgf Max.
1.7 Total Unmating Force: 1.0 Kgf Min.
1.8 Operating Temperature: -25°C to +85°C

915DPXXX 1XXXXXXN0

- SERIES NO.
- NUMBER OF POSITION
  20: 20-POSITION
- CONTACT STYLE
  S: SOCKET
- CONTACT MATERIALS
  1: BRASS
- CONTACT FINISH
  7: G/F MATTE TIN
  8: 15u" MATTE TIN
  9: 15u" MATTE TIN
- SHELL FINISH
  8: SOLDERABLE NICKEL
- N: IT'S COMPLIANT WITH RoHs
- INSULATOR MATERIALS
  2: LCP
- COLOR STYLE
  1: ALL BLACK
- FLANGE MOUNTING OPTION
  2: M2 THREADED HOLE
  G: M2 THREADED HOLE WITH M2 SCREWLOCK INSTALLED (M2x3.5)
- BOARD MOUNTING OPTION
  3: TRIPLE ARROWHEAD BOARDLOCK

SOURCE SIDE

| PIN NO. | PIN NAME |
|---|---|
| 1 | ML_Lane 0 (p) |
| 2 | GND |
| 3 | ML_Lane 0 (n) |
| 4 | ML_Lane 1 (p) |
| 5 | GND |
| 6 | ML_Lane 1 (n) |
| 7 | ML_Lane 2 (p) |
| 8 | GND |
| 9 | ML_Lane 2 (n) |
| 10 | ML_Lane 3 (p) |
| 11 | GND |
| 12 | ML_Lane 3 (n) |
| 13 | CONFIG1 |
| 14 | CONFIG2 |
| 15 | AUX CH (p) |
| 16 | GND |
| 17 | AUX CH (n) |
| 18 | Hot Plug Detect |
| 19 | Return |
| 20 | DP_PWP |

SINK SIDE

| PIN NO. | PIN NAME |
|---|---|
| 1 | ML_Lane 3 (n) |
| 2 | GND |
| 3 | ML_Lane 3 (p) |
| 4 | ML_Lane 2 (n) |
| 5 | GND |
| 6 | ML_Lane 2 (p) |
| 7 | ML_Lane 1 (n) |
| 8 | GND |
| 9 | ML_Lane 1 (p) |
| 10 | ML_Lane 0 (n) |
| 11 | GND |
| 12 | ML_Lane 0 (p) |
| 13 | CONFIG1 |
| 14 | CONFIG2 |
| 15 | AUX CH (p) |
| 16 | GND |
| 17 | AUX CH (n) |
| 18 | Hot Plug Detect |
| 19 | Return |
| 20 | DP_PWR |

PROPRIETARY NOTE:
This document contains confidential information and proprietary to Rego Electronics and shall not be reproduced or disclosed to other documents or used for any purpose other than that for which was obtained without the expressed written consent of Rego Electronics.

| | | | |
|---|---|---|---|
| .X ± 0.30 | APPROVED: Chris | REGO http://www.rego.com.tw | |
| .XX ± 0.20 | CHECKED: Andy | | |
| .XXX± 0.15 | DRAWN: Vic | TITLE: Display Port High-Rise Type | |
| X° ± 3° | UNITS: mm | SCALE: NONE | PART NO: 915DP20S-1783G12N0 |
| | | | SHEET: 1 OF 1 |

| REV | DATE |
|---|---|
| A0 | 31.8.2018 |